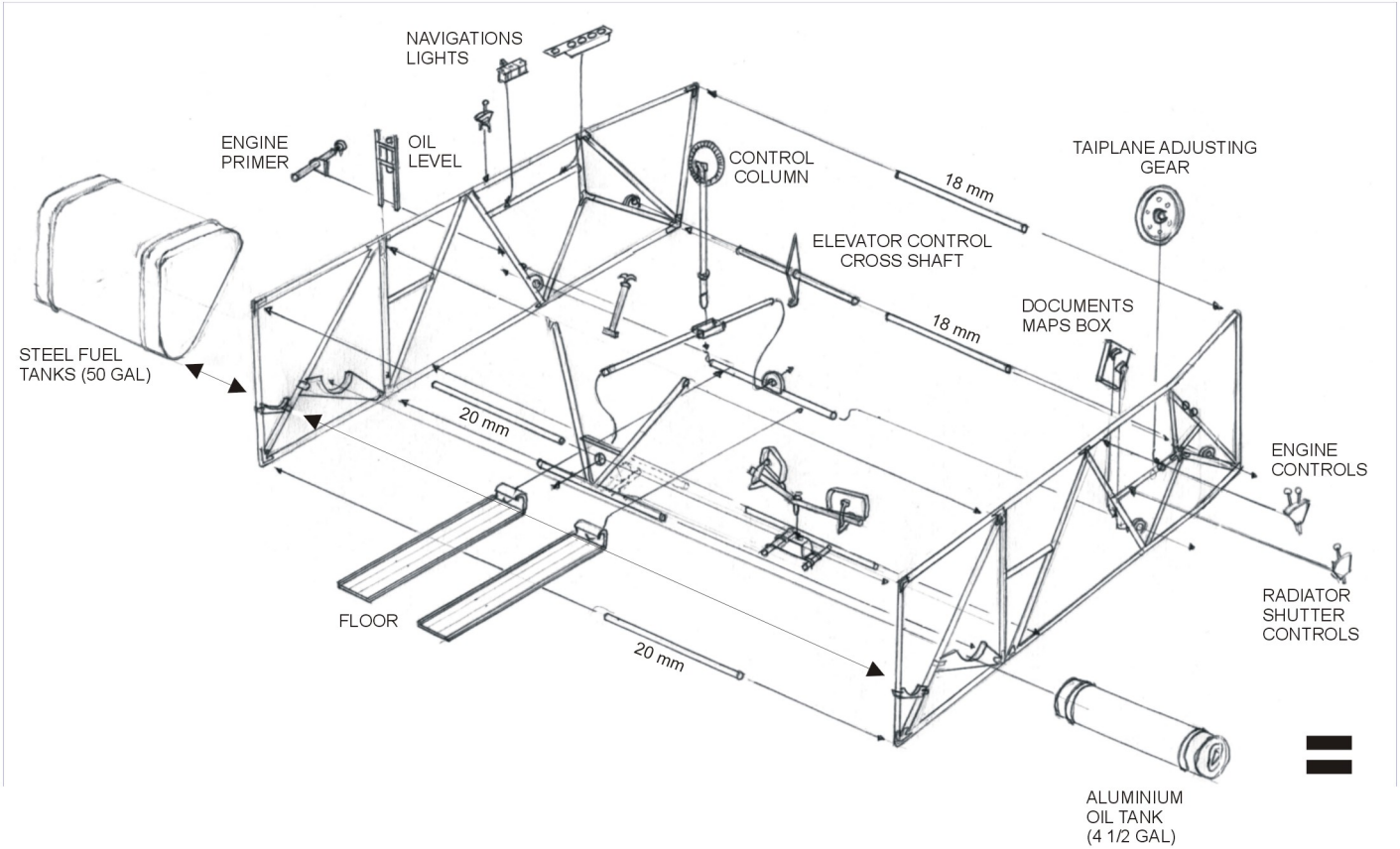
NAVIGATIONS LIGHTS
ENGINE PRIMER
OIL LEVEL
CONTROL COLUMN
18 mm
TAIPLANE ADJUSTING GEAR
ELEVATOR CONTROL CROSS SHAFT
18 mm
DOCUMENTS MAPS BOX
STEEL FUEL TANKS (50 GAL)
20 mm
ENGINE CONTROLS
RADIATOR SHUTTER CONTROLS
FLOOR
20 mm
ALUMINIUM OIL TANK (4 1/2 GAL)